KAGAMA

REAR WING AND MOUNT

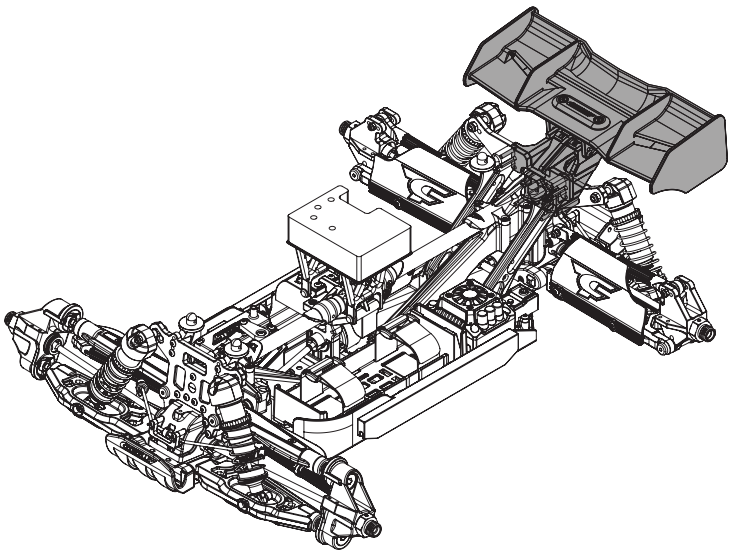

Required Tools:

- 2.0 Hex Driver

STEP 1

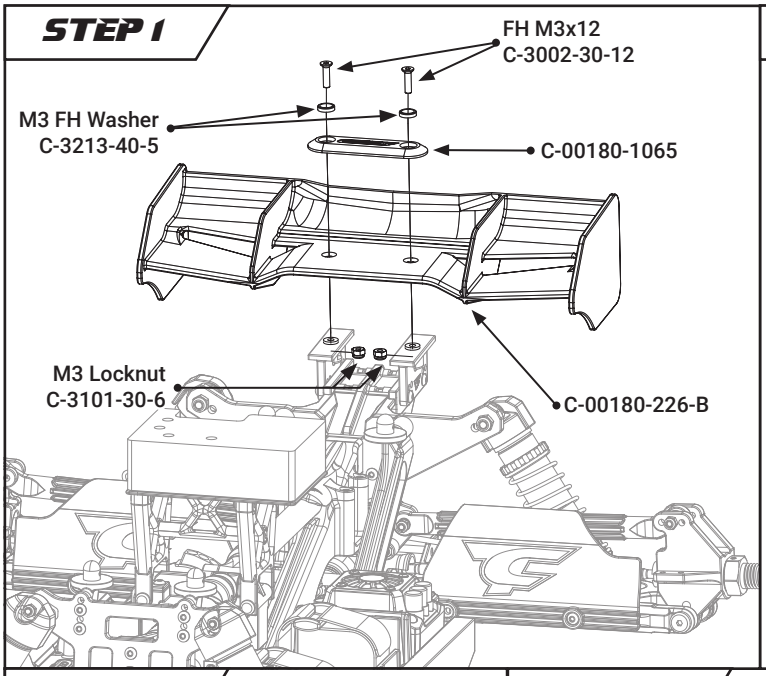

STEP 2

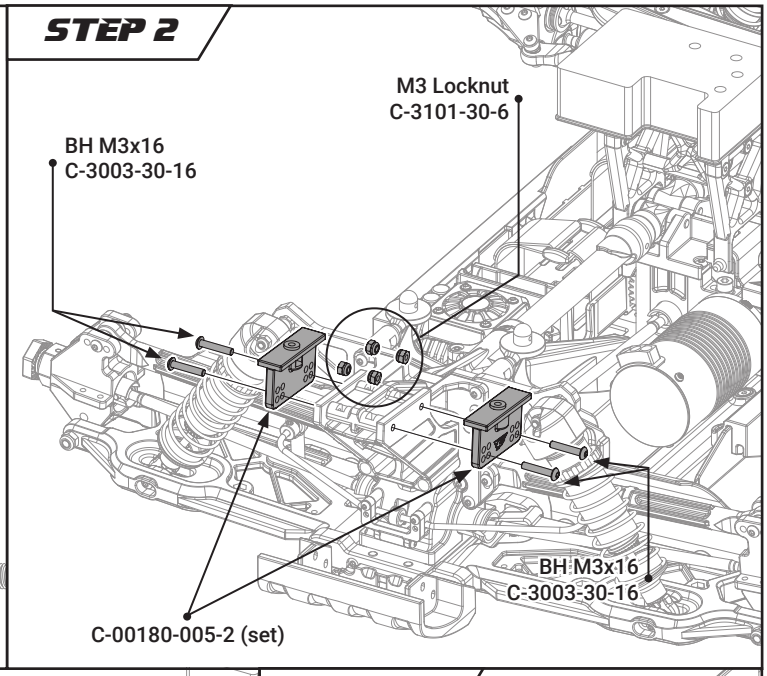

STEP 3

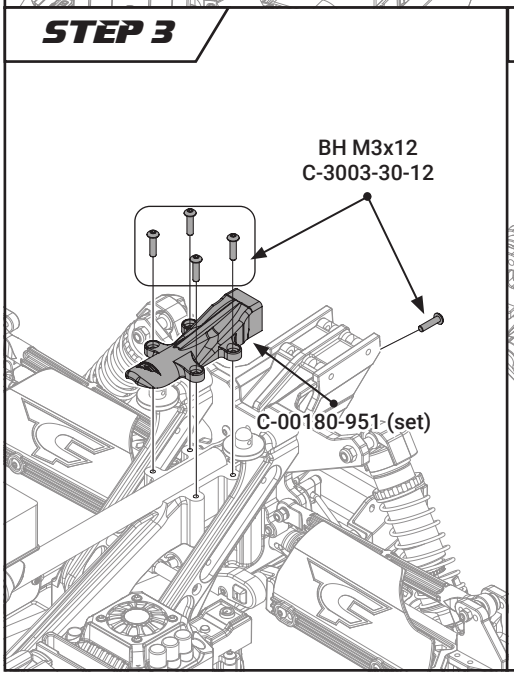

STEP 4

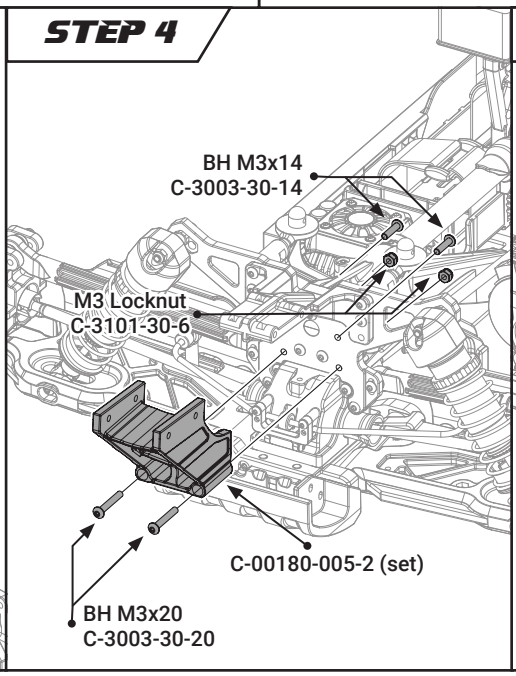
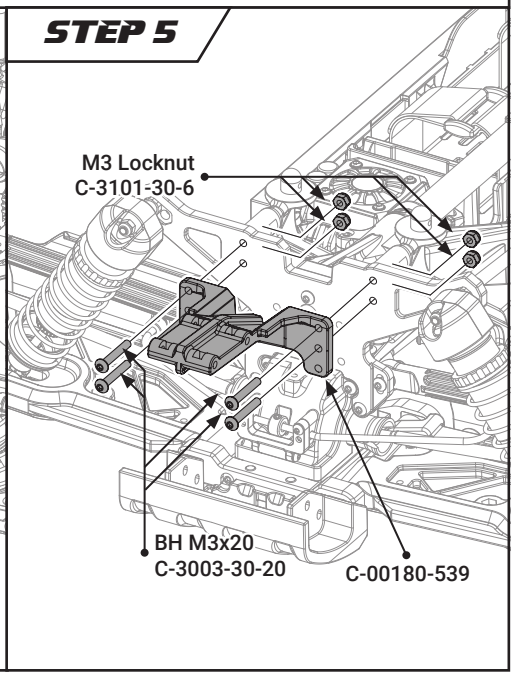
STEP 5